Jig for making tractor wheel

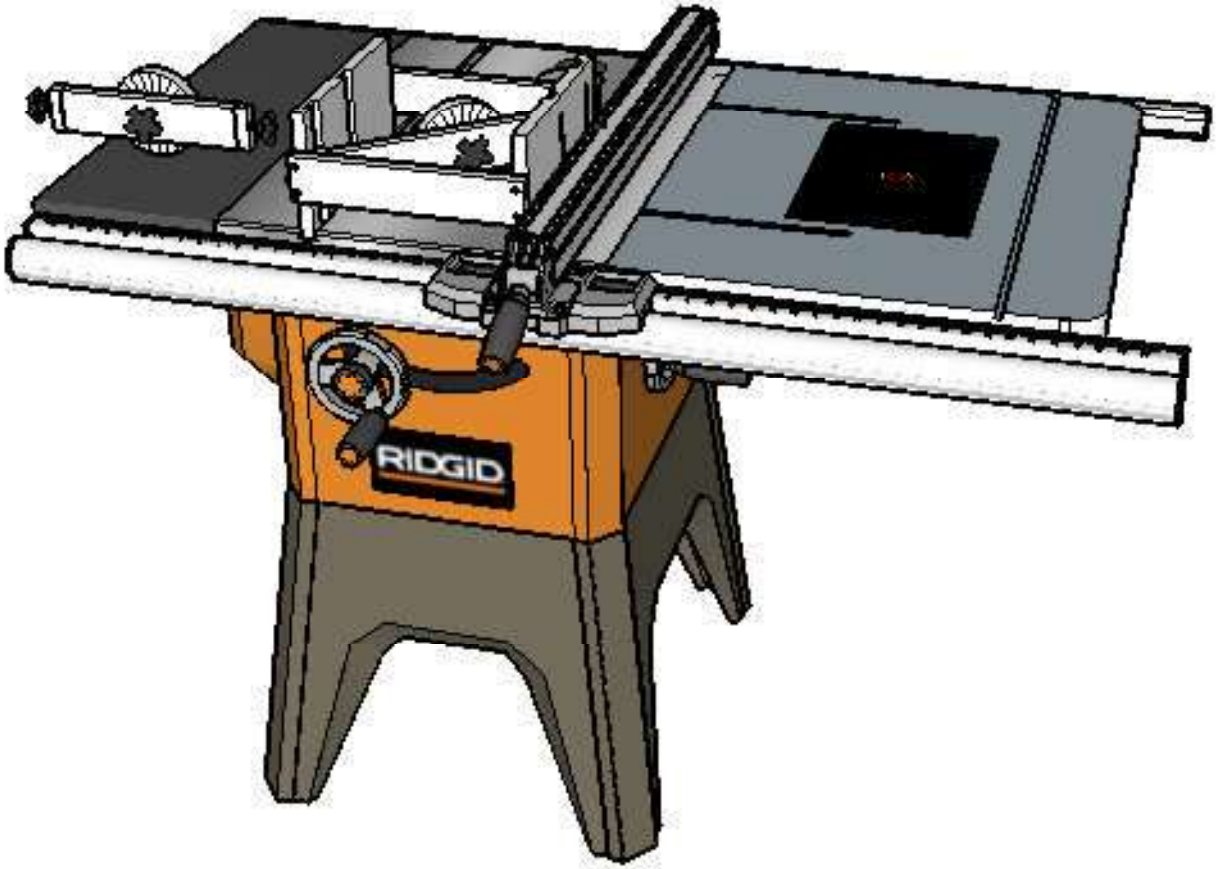

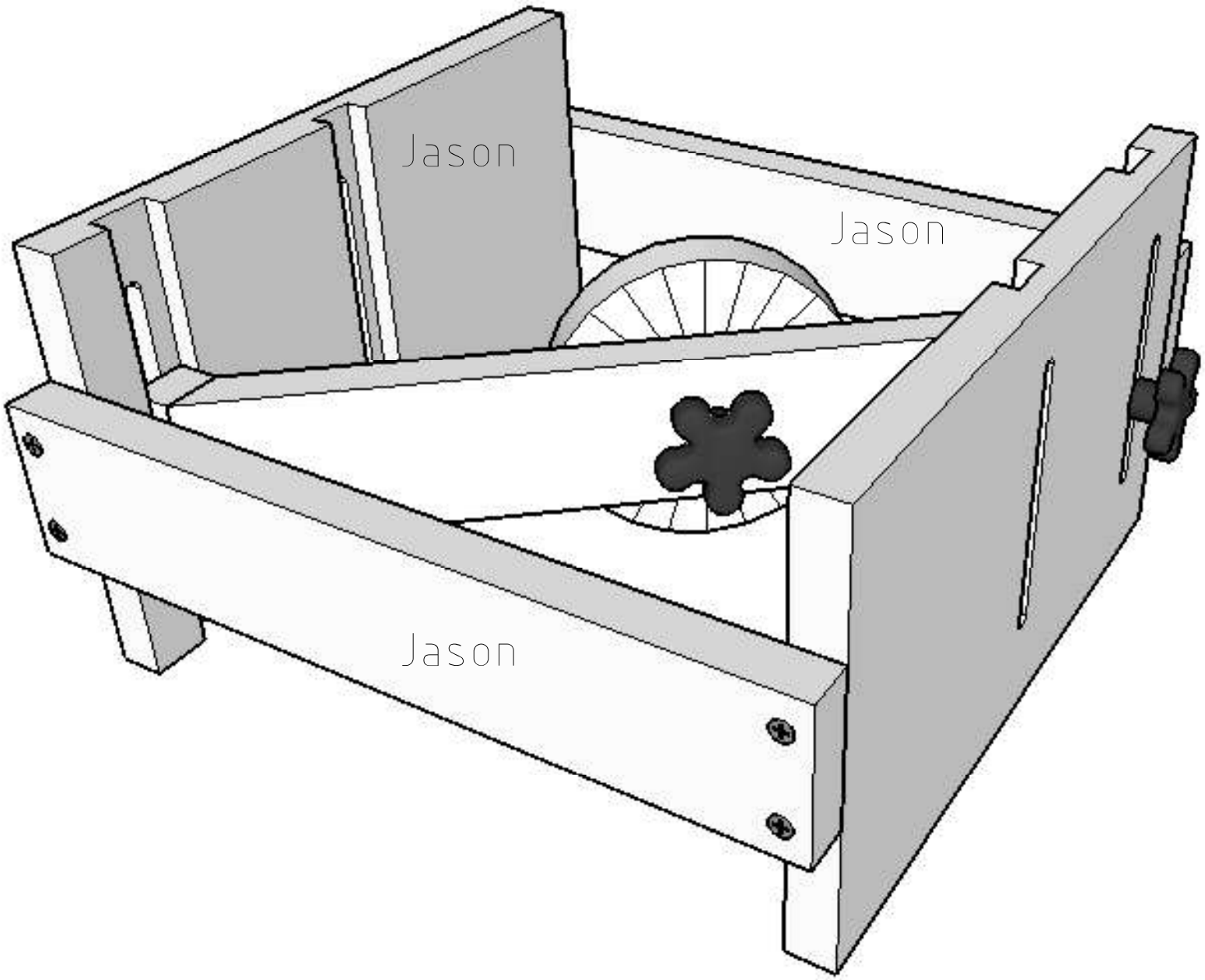
Jason
Jason
Jason

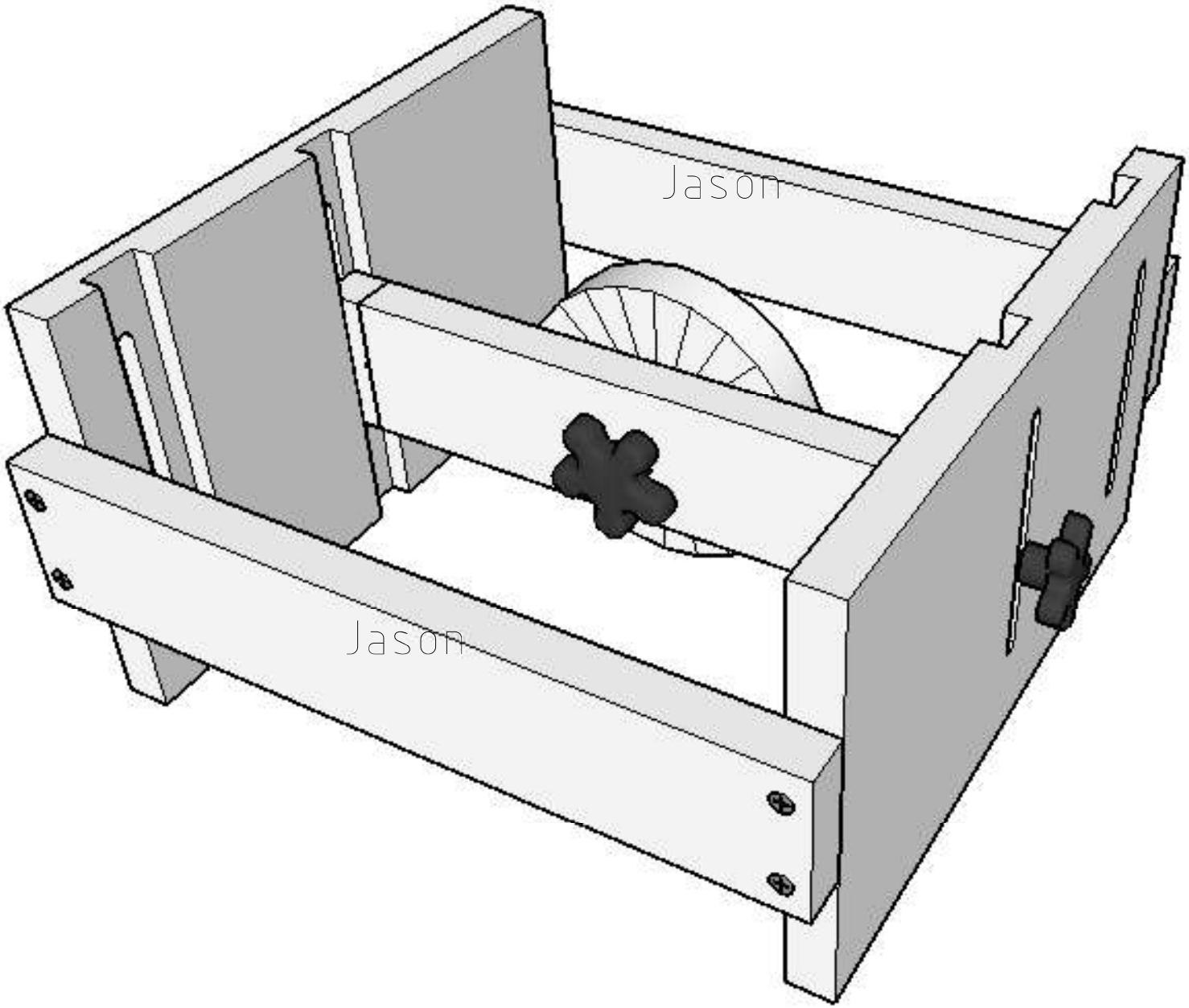
Jason
Jason

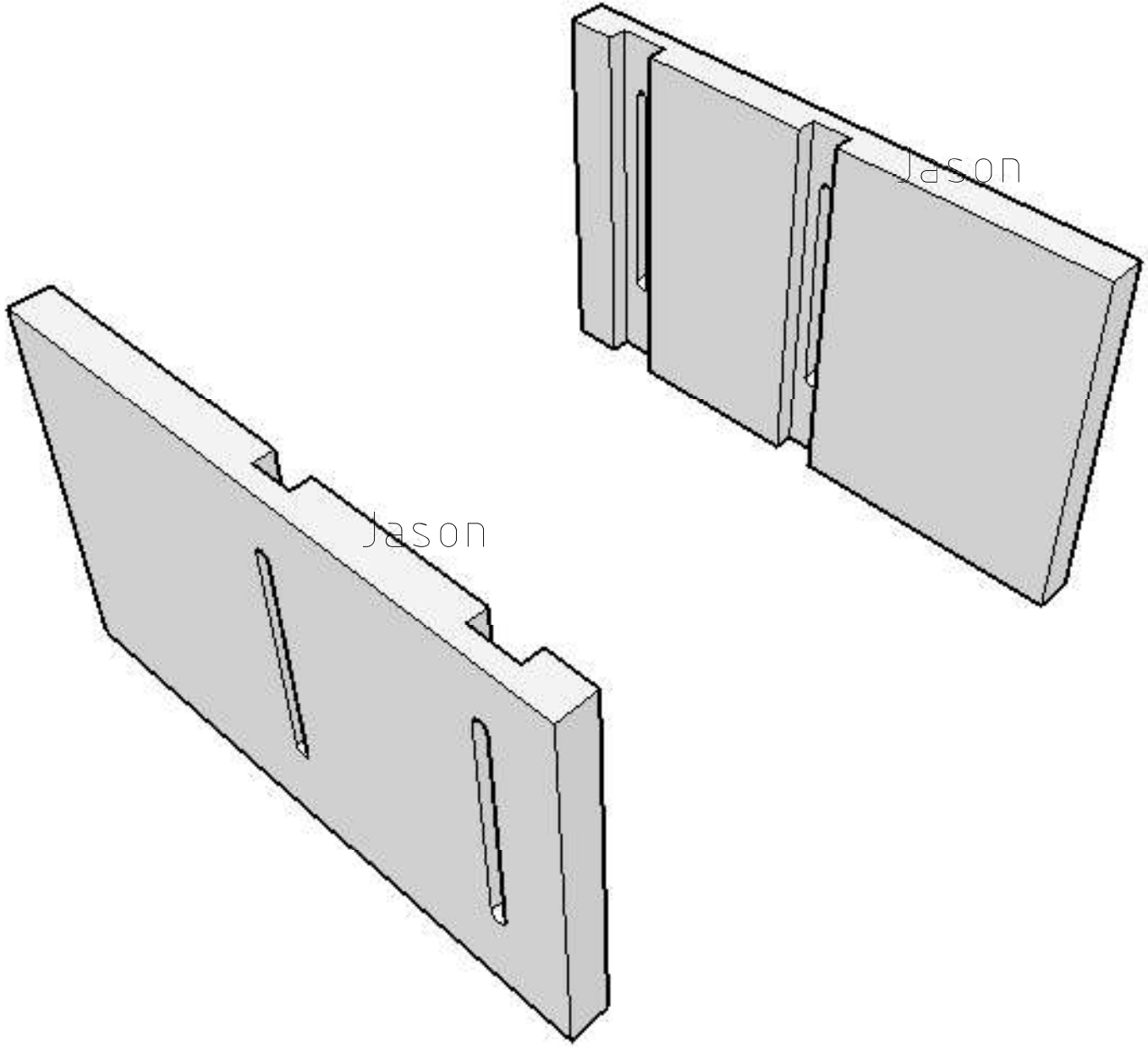
Jason
Jason

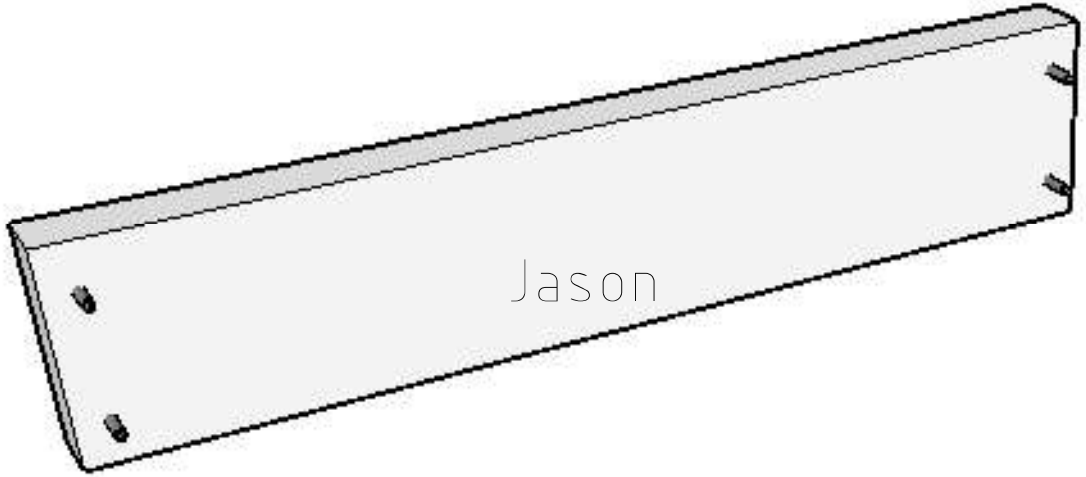
Jason

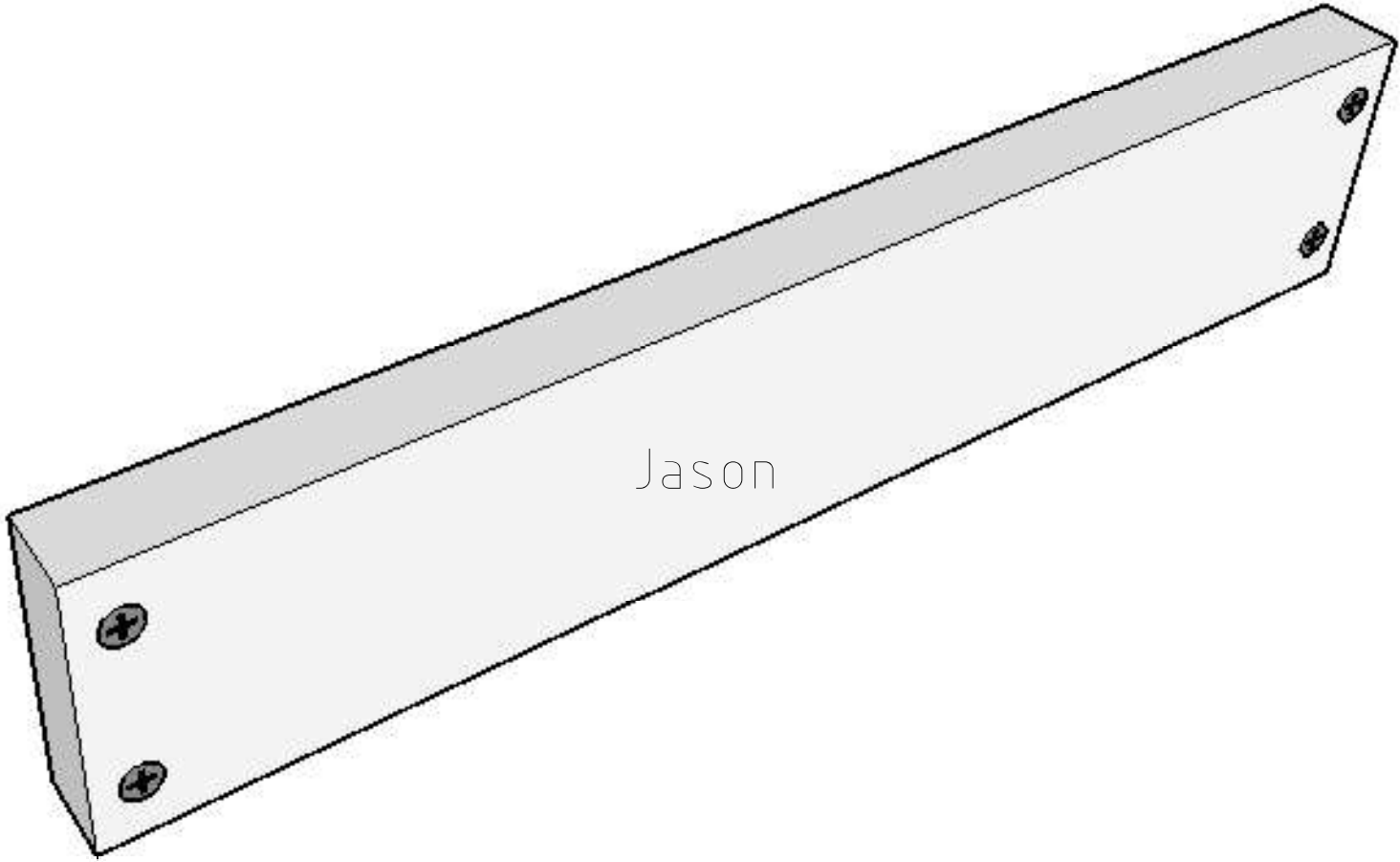
Jason

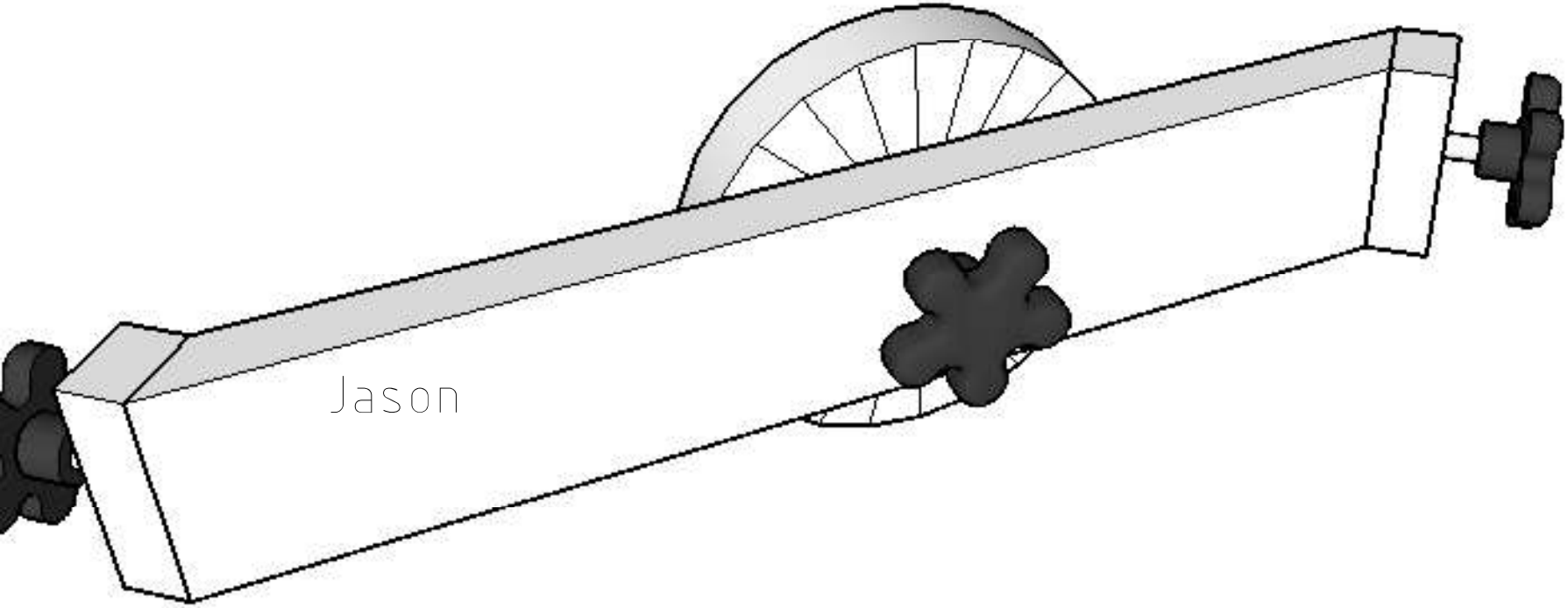
Jason

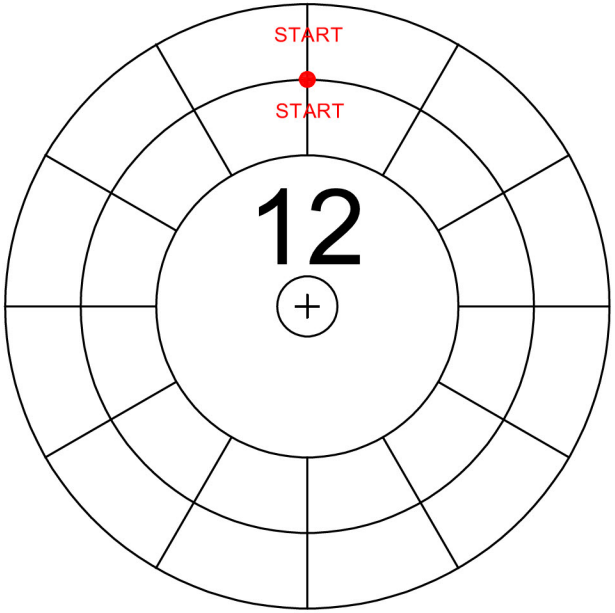
START
START
12

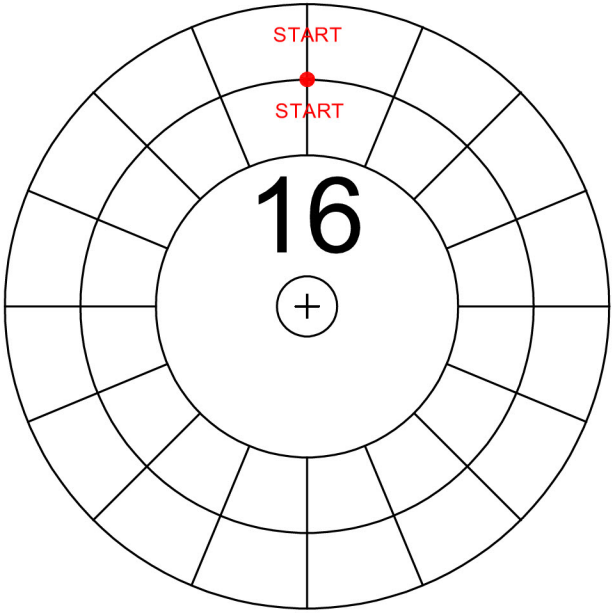
START
START
16

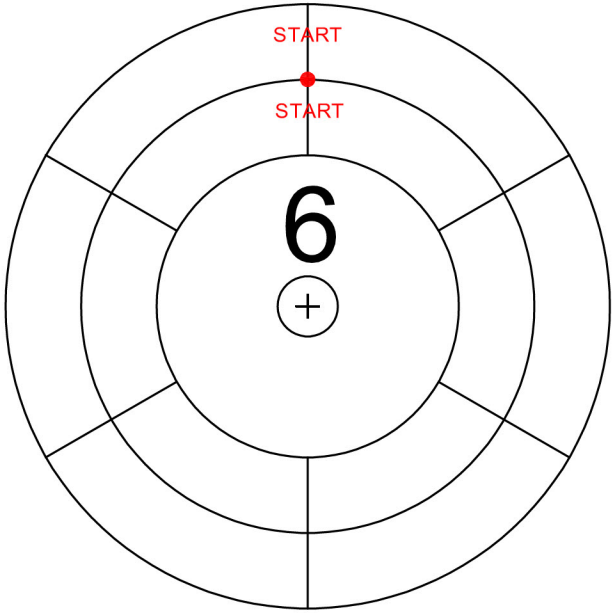
START
START
6

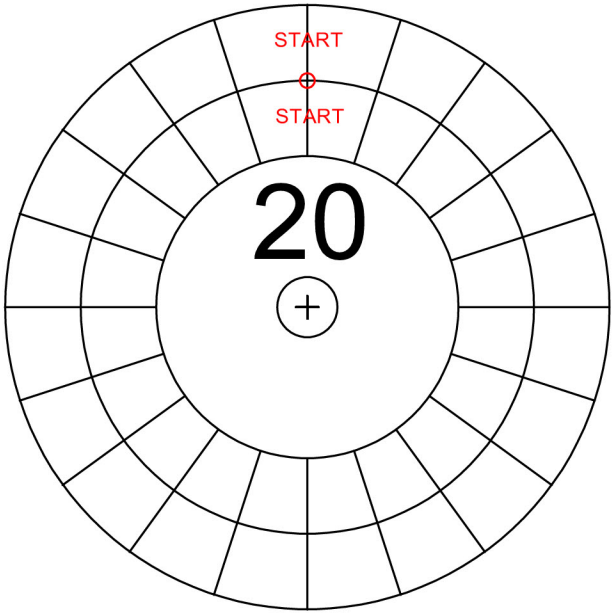
START
START
20

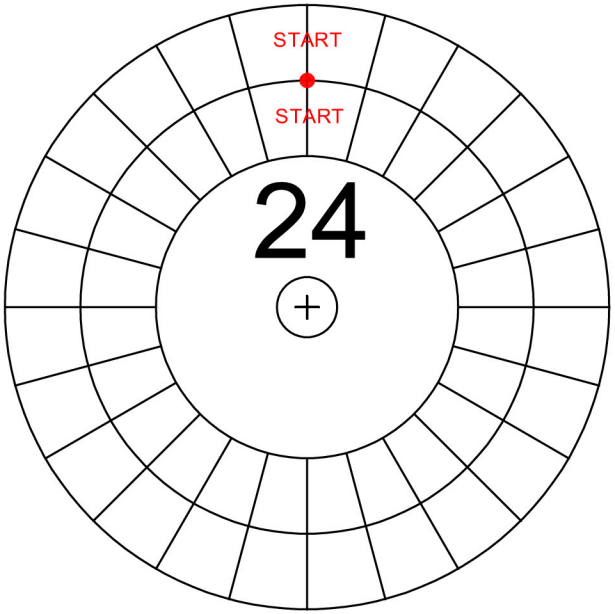
START
START
24

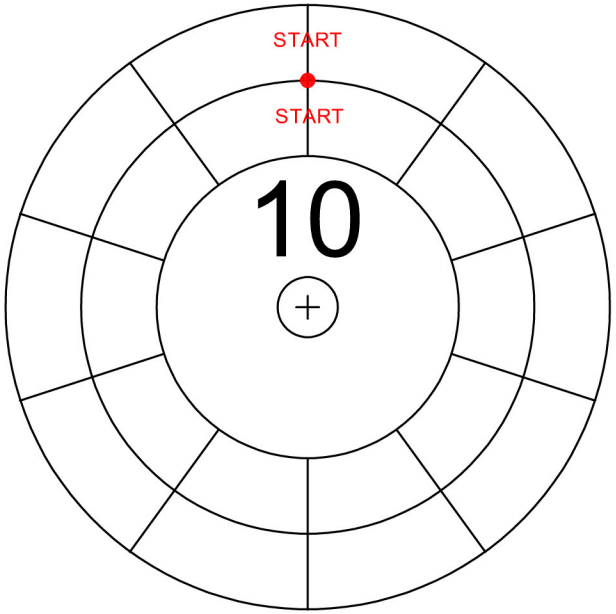
START
START
10

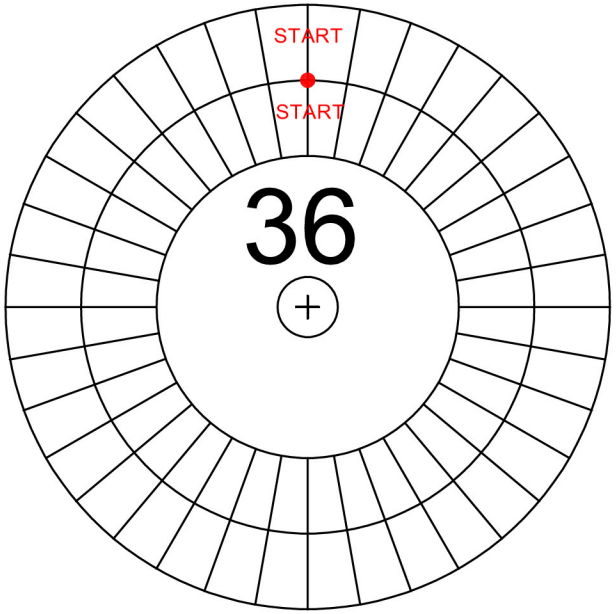
START
START
36

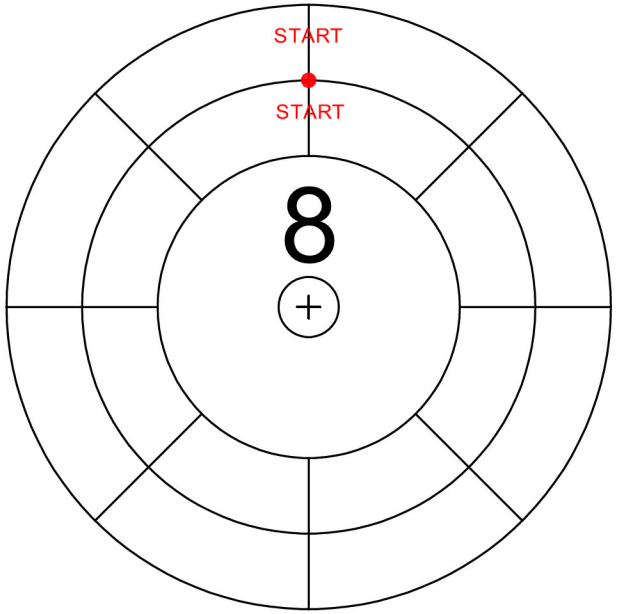
START
START
8

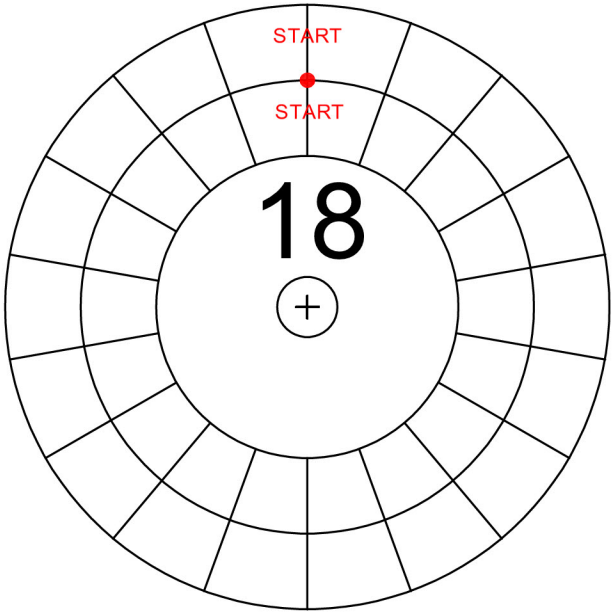
START
START
18

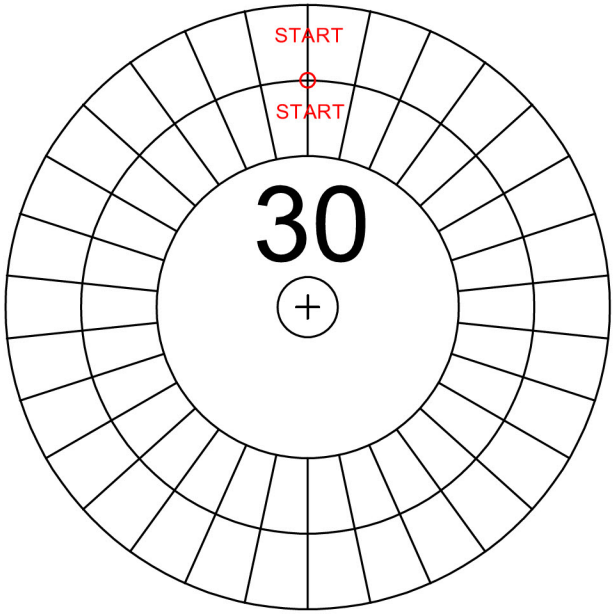
START
START
30

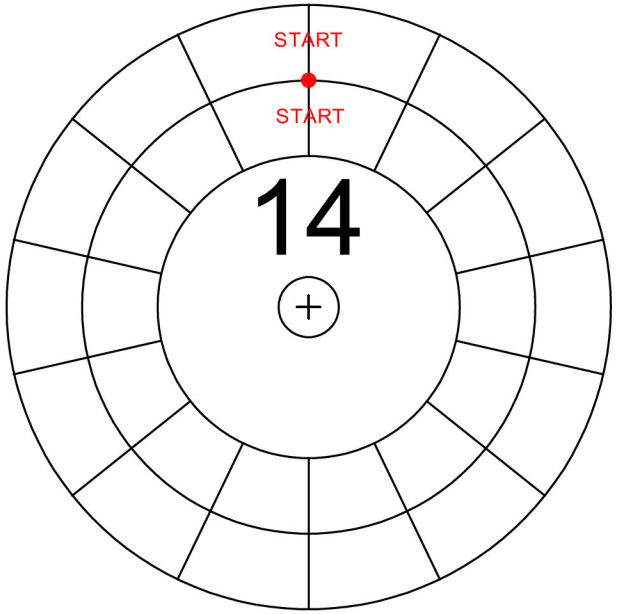
START
START
14

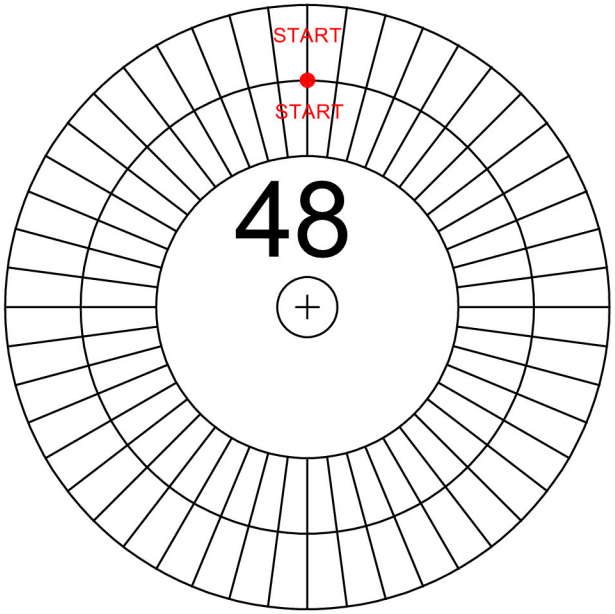
START
START
48

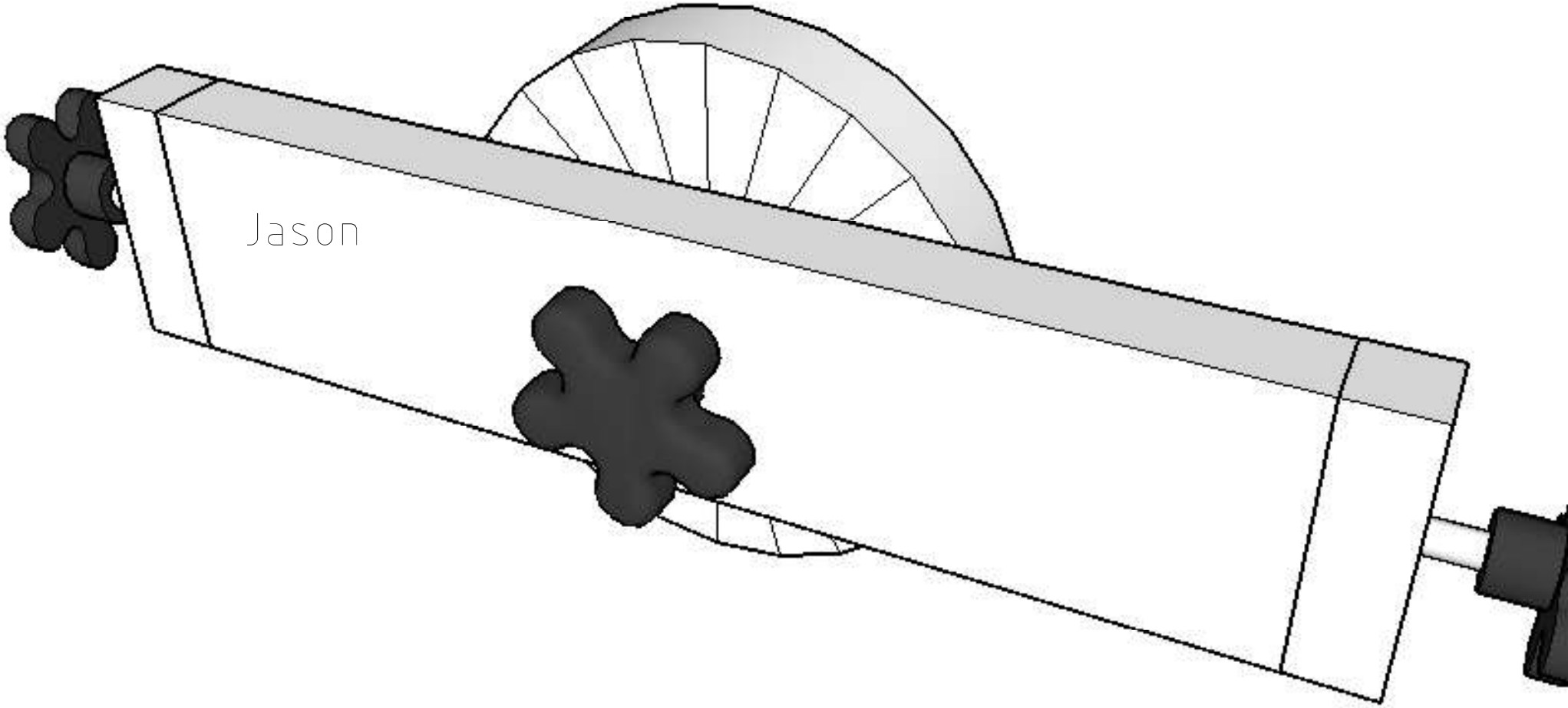
Jason