(SPOKE)WHEEL JIG

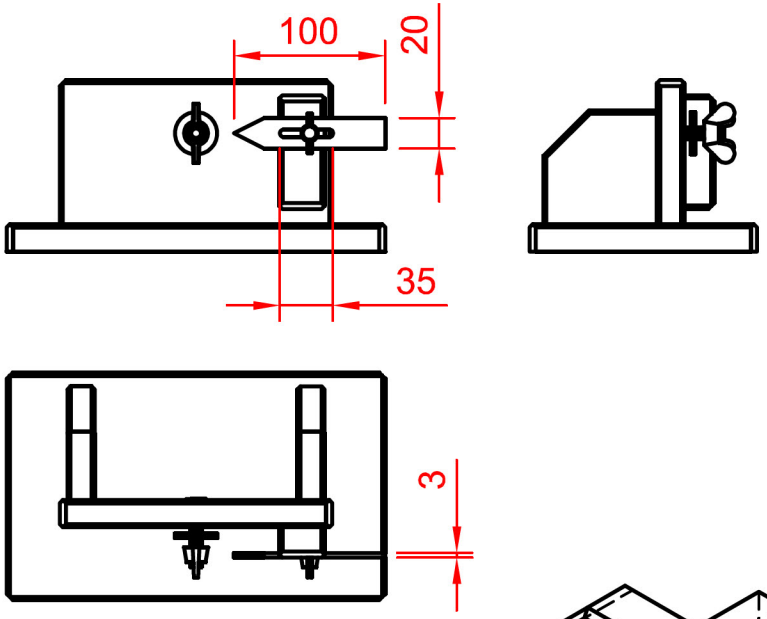

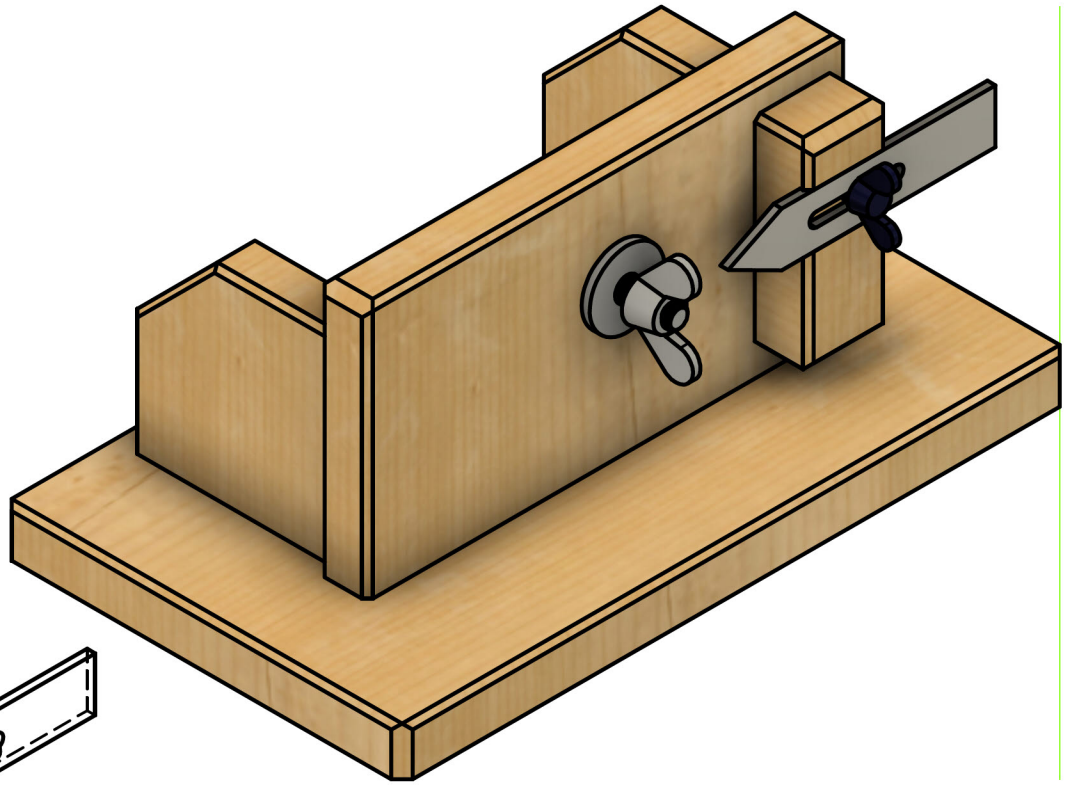

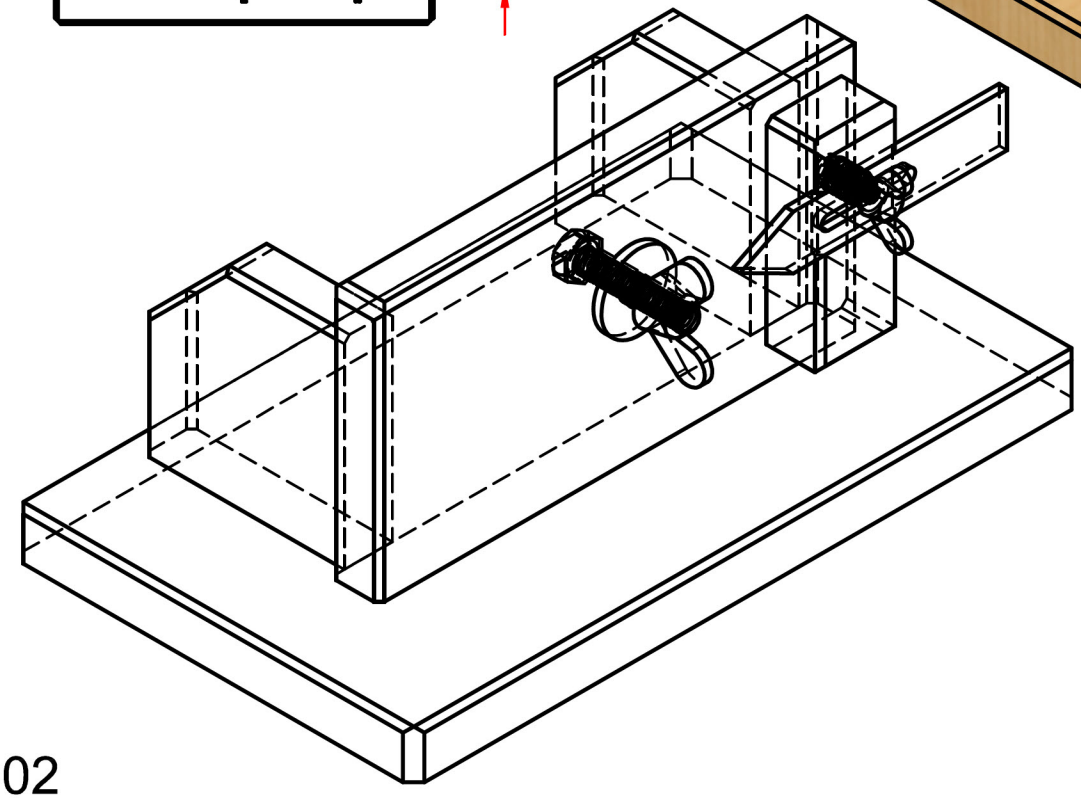

DutchyPatterns 2018

(SPOKE)WHEEL JIG

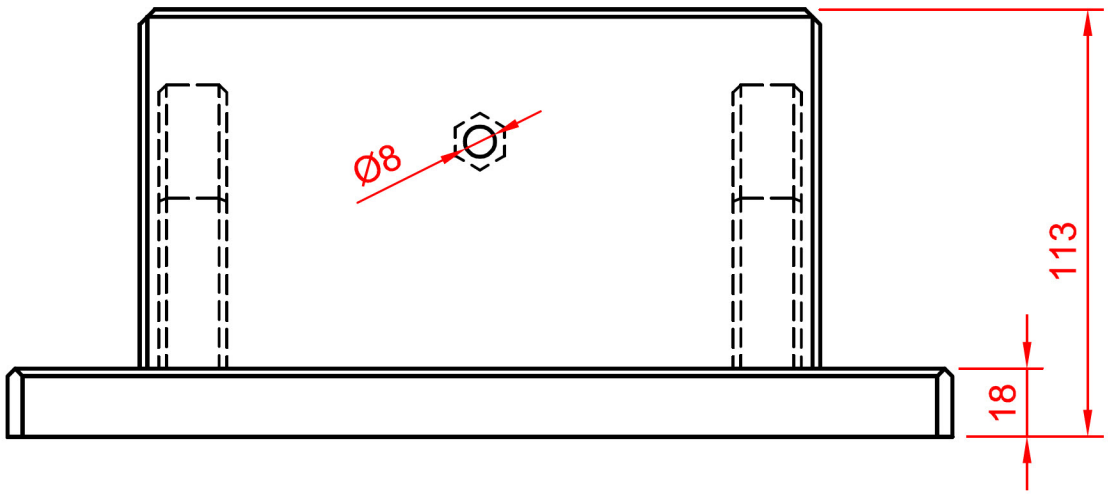

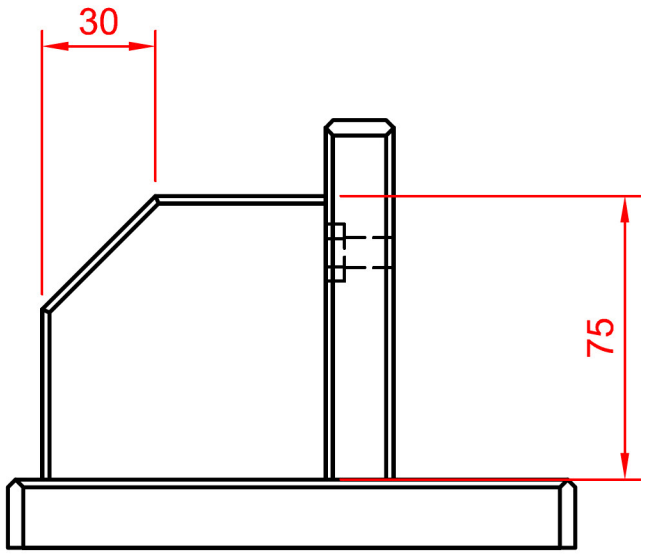

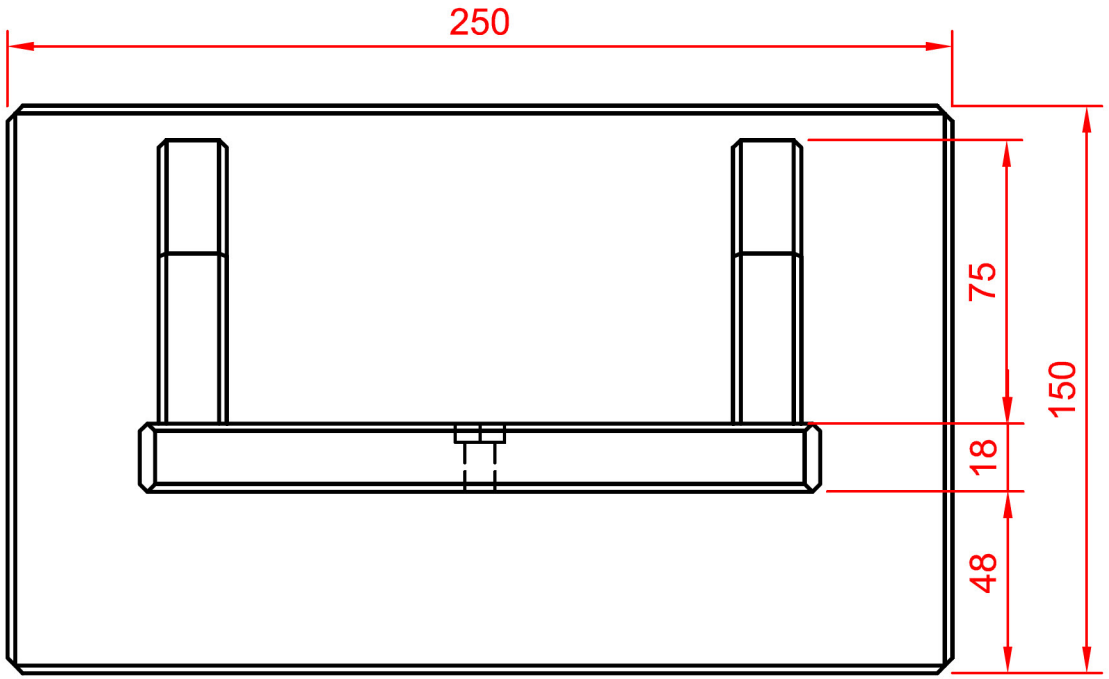

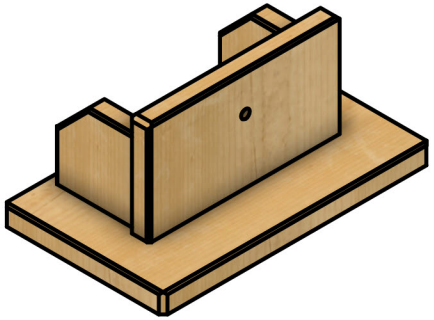

01
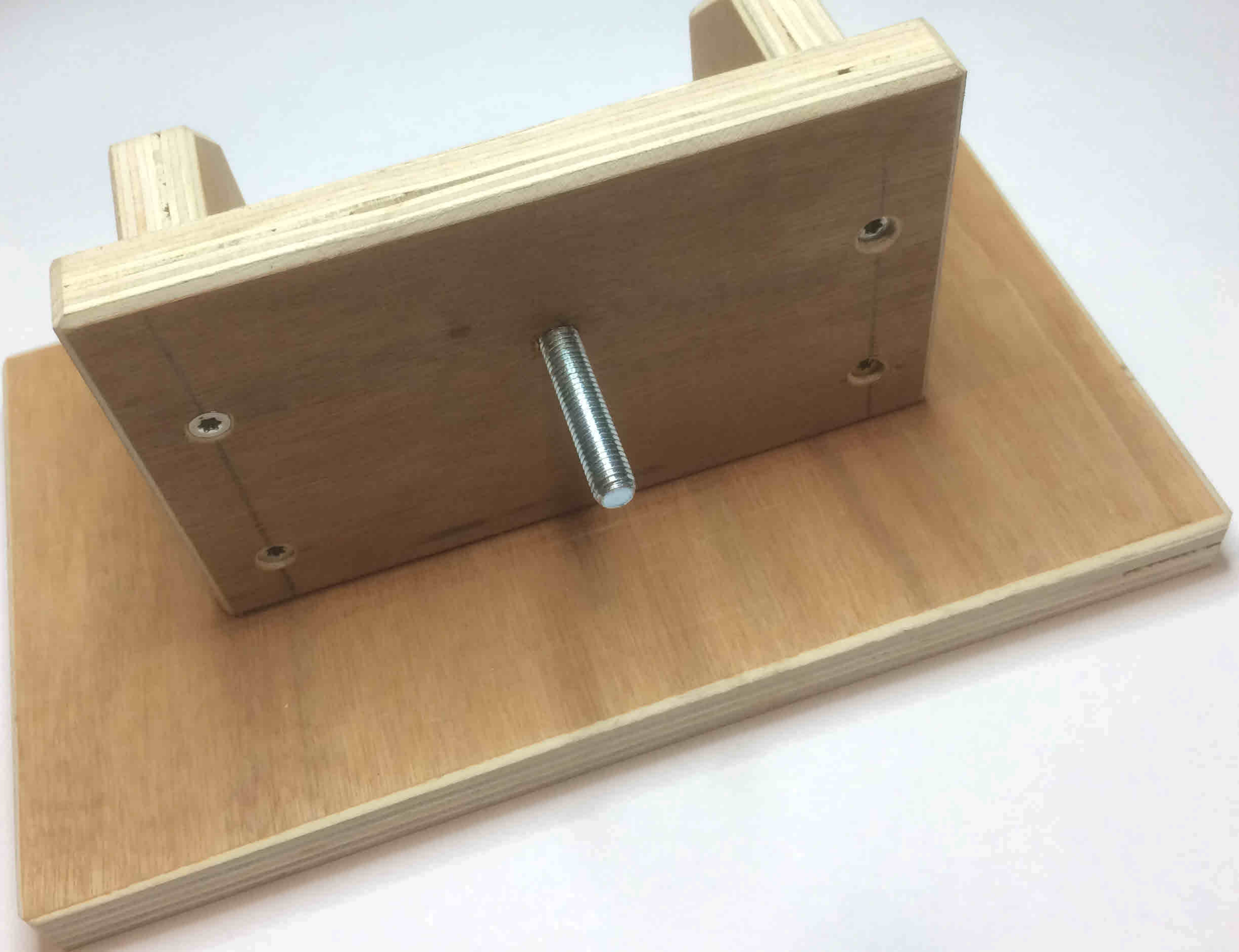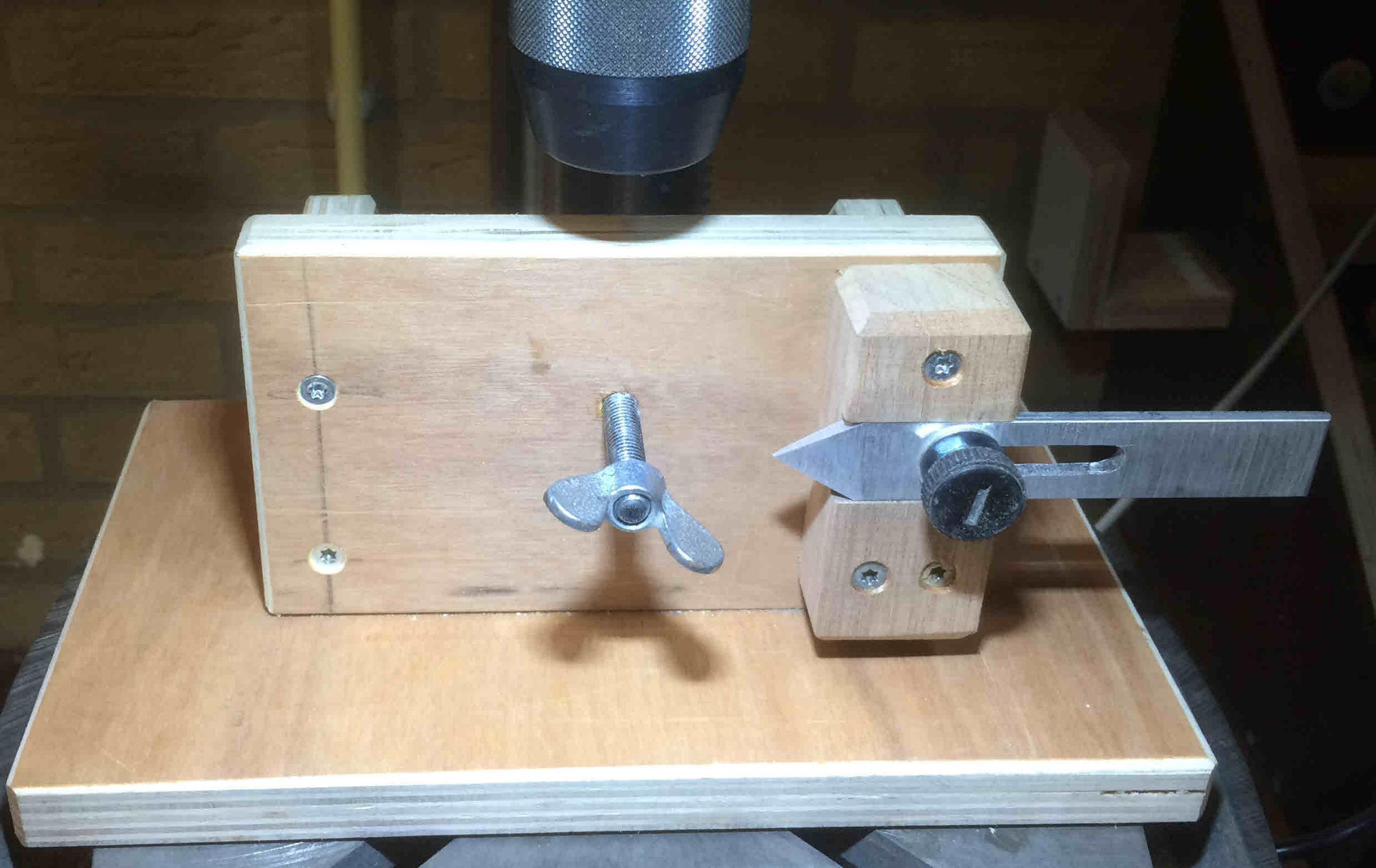
DutchyPatterns 2018